MURR ELEKTRONIK
stay connected

## MVK-MPNIO F DI8/4 F DO4 7/8" IRT

MVK ProfiNet/PROFIsafe Compact module, metal,

safe inputs/outputs up to cat.4/PLe (EN ISO 13849-1), up to SIL3 (IEC 61508), up to SILCL3 (IEC 62061)
FDI8/4 DO4 (IRT)
Ethernet 10/100 Mbit/s; M12, D-coded
7/8", 5-pole, 2× max. 9 A
M12, 5-pole, A-coded

**Link to Product**

### Illustration

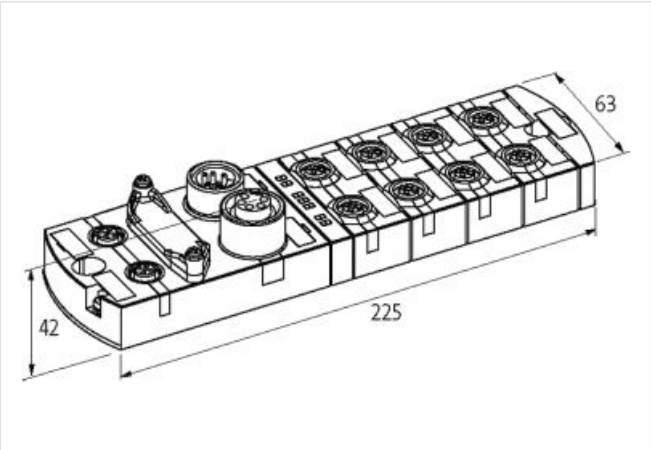


Product may differ from Image

### Commercial data

| | |
|---|---|
| ECLASS-6.0 | 27242604 |
| ECLASS-6.1 | 27242604 |
| ECLASS-7.0 | 27242604 |
| ECLASS-8.0 | 27242604 |
| ECLASS-9.0 | 27242604 |
| ECLASS-10.1 | 27242604 |
| ECLASS-11.1 | 27242604 |
| ECLASS-12.0 | 27242604 |
| ETIM-5.0 | EC001599 |
| customs tariff number | 85389099 |
| GTIN | 4048879570763 |
| Packaging unit | 1 |

### Safety codes

| | |
|---|---|
| DCavg (EN ISO 13849-1) | 98 % |
| Service life | 20 a |
| Category (EN ISO 13849-1) | 4 |
| PFHd (IEC 61508) | 16,53 E-10/h |
| Performance level (EN ISO 13849-1) | e |
| SIL (IEC 61508) | 3 |
| SIL CL (IEC 62061) | 3 |

The information in this Product-PDF has been compiled with the utmost care.
Liability for the correctness completeness and topicality of the information is restricted to gross negligence. Version: 2024-05-02

MURR ELEKTRONIK
stay connected

| | |
|---|---|
| **Electrical data \| Supply** | |
| Norm operating voltage | EN 61131-2 |
| Operating voltage UA DC | 24 V |
| Operating current per pin max. | when using pin 1 and pin 5, when using pin 1 or pin 5, 0.2 A, 0.7 A |
| Total current UA max. | 9 A |
| Total current US max. | 9 A |
| **Electrical data \| Input** | |
| Operating voltage F input | 24 V |
| Type Safety input | for electronical sensors or mechanical switches |
| **Electrical data \| Output** | |
| Output current per pin (safety) max. | 2 A |
| **Industrial communication** | |
| Supported protocol | PROFINET |
| **Industrial communication \| Profinet** | |
| Number of active connections (IO controller) max. | 2 |
| IRT (network communication) | yes |
| MRP client | yes |
| PROFINET addressing | DCP |
| PROFINET conformance class | C |
| PROFINET specification | V2.2 |
| Shared device/input | yes |
| **Diagnostics** | |
| Actuator warning | per channel via LED and BUS |
| Diagnostic | No voltage, Under voltage |
| Diagnostic via BUS | per module and channel |
| Diagnostic via LED | per module and channel |
| Wire break detection | yes |
| Short circuit diagnosis | yes |
| LED display | Ethernet connection/data traffic |
| Cross-link detection | Sensor/Actuator |
| Overload diagnosis | yes |
| **Device protection \| Electrical** | |
| Degree of protection (EN IEC 60529) | IP67 |
| Overload resistant | yes |
| Short-circuit protected | yes |
| **Mechanical data \| Mounting data** | |
| Suitable for mounting type | 2-hole screw mounting |
| Height | 44 mm |
| Width | 63 mm |
| Depth | 225 mm |
| **Environmental characteristics \| Climatic** | |
| Operating temperature min. | -20 °C |
| Operating temperature max. | 55 °C |
| Storage temperature min. | -40 °C |
| Storage temperature max. | 70 °C |
| **Connection type 5** | |
| Connection type 1 | 0-3 |
| Connection type 2 | 4-7 |
| Connection type 3 | Power In |
| Connection type 4 | Power Out |

The information in this Product-PDF has been compiled with the utmost care.
Liability for the correctness completeness and topicality of the information is restricted to gross negligence. Version: 2024-05-02

| | |
|---|---|
| Connection type 5 | XF2 |
| Family construction form | M12 |
| Gender | female |
| Color contact carrier | yellow |
| Coding | A |
| No. of poles | 5 |
| PIN 1 | n.c. |
| PIN 2 | n.c. |
| PIN 3 | Mx |
| PIN 4 | Px |
| PIN 5 | PE |
| Family construction form | M12 |
| Gender | female |
| Color contact carrier | yellow |
| Coding | A |
| No. of poles | 5 |
| PIN 1 | 24 V DC (US 1) Test Pulse P 4 |
| PIN 2 | FDI |
| PIN 3 | 0 V (US 1) |
| PIN 4 | FDI |
| PIN 5 | 24 V DC (US 1) Test Pulse P 2 |
| Family construction form | 7/8" |
| Gender | male |
| Color contact carrier | black |
| No. of poles | 5 |
| PIN 1 | 0 V (UA) |
| PIN 2 | 0 V (US) |
| PIN 3 | PE |
| PIN 4 | 24 V DC (US) |
| PIN 5 | 24 V DC (UA) |
| Family construction form | 7/8" |
| Gender | female |
| Color contact carrier | black |
| No. of poles | 5 |
| PIN 1 | 0 V (UA) |
| PIN 2 | 0 V (US) |
| PIN 3 | PE |
| PIN 4 | 24 V DC (US) |
| PIN 5 | 24 V DC (UA) |
| Mounting method | inserted, screwed |
| Tightening torque | 0,6 Nm |
| Family construction form | M12 |
| Gender | female |
| Color contact carrier | black |
| Coding | D |
| No. of poles | 4 |
| PIN 1 | TD + |
| PIN 2 | RD + |
| PIN 3 | TD - |
| PIN 4 | RD - |

The information in this Product-PDF has been compiled with the utmost care.
Liability for the correctness completeness and topicality of the information is restricted to gross negligence. Version: 2024-05-02