MURR ELEKTRONIK
stay connected

**Y-Distributor M12 male / M12 female 0° A-cod.**

PVC 3x0.34 gy UL/CSA 30m

Y-connector M12 – M12, 4/3-pole
Male straight – females straight
Art-No. 7005 - M12 Lite - (plastic hexagonal screw) on request
Plastic housings with good resistance against chemicals and oils.
The resistance to aggressive media should be individually tested for your application. Further details on request.
Further cable lengths on request.

## Link to Product

**Illustration**

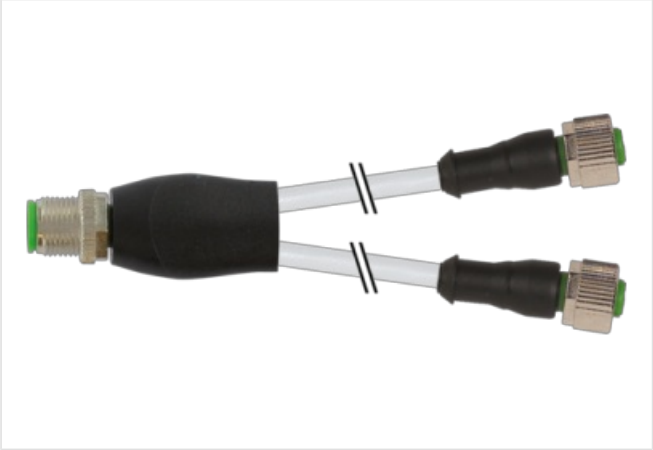

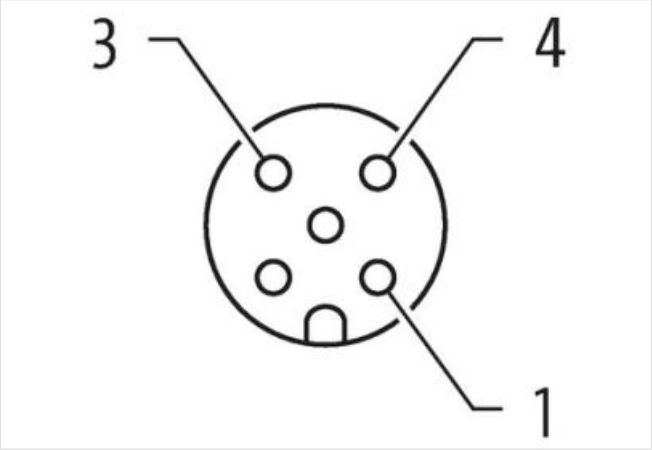


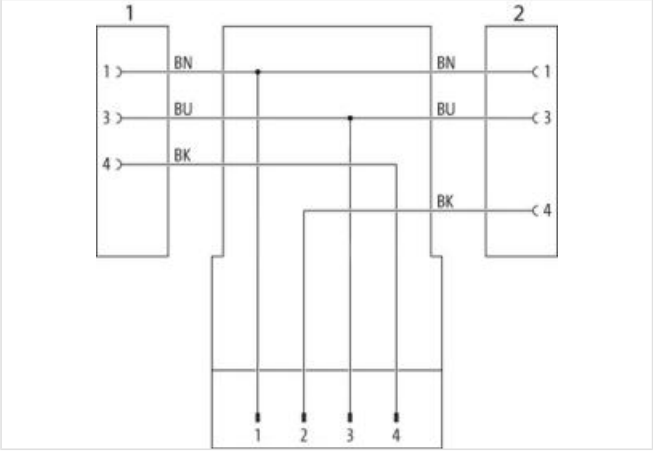


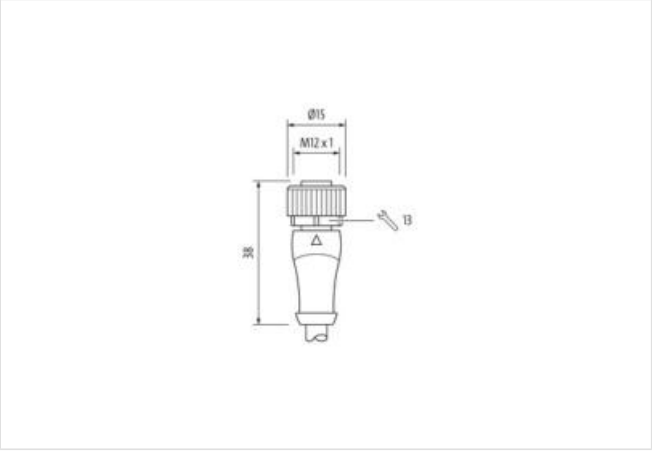

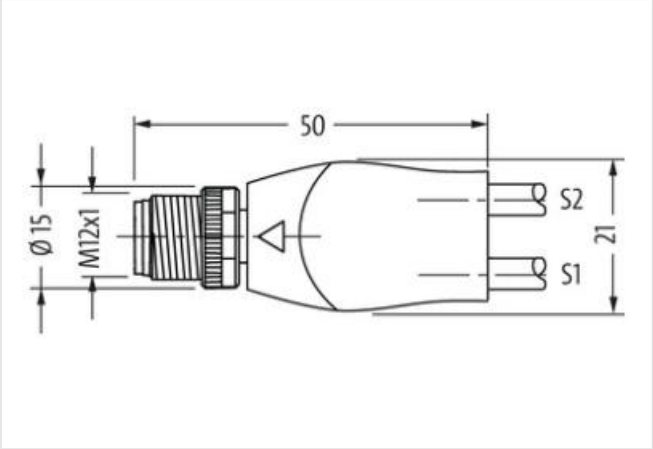


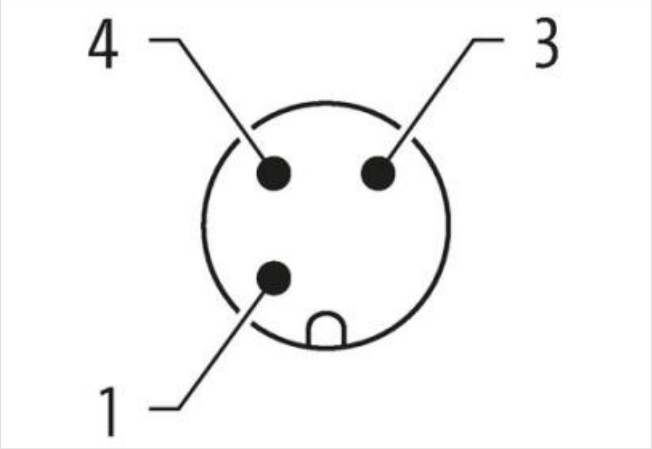


Product may differ from Image

| | |
|---|---|
| Cable length | 30 m |
| **Side 1** | |
| Tightening torque | 0,6 Nm |
| Mounting method | inserted, screwed |
| Coating contact | gold plated |
| Family construction form | M12 |
| Thread | M12 x 1 |
| suitable for corrugated tube (internal Ø) | 10 mm |
| Coding | A |
| Material contact | Copper alloy |
| Material | PUR |
| No. of poles | 4 |
| Width across flats | SW13 |
| Degree of protection (EN IEC 60529) | IP65, IP66K, IP67 |
| **Side 2** | |
| Tightening torque | 0,6 Nm |
| Mounting method | inserted, screwed |
| Coating contact | gold plated |
| Family construction form | M12 |
| Thread | M12 x 1 |
| Coding | A |
| Material contact | Copper alloy |
| Material | PUR |
| No. of poles | 3 |
| Width across flats | SW13 |
| Degree of protection (EN IEC 60529) | IP65, IP66K, IP67 |
| **Side 3** | |
| Mounting method | inserted, screwed |
| Family construction form | M12 |
| Coding | A |
| No. of poles | 3 |
| **Commercial data** | |

| | |
|---|---|
| ECLASS-6.0 | 27279218 |
| ECLASS-7.0 | 27279218 |
| ECLASS-8.0 | 27279218 |
| ECLASS-9.0 | 27060311 |
| ECLASS-10.1 | 27060313 |
| ECLASS-11.1 | 27060313 |
| ECLASS-12.0 | 27060313 |
| ETIM-5.0 | EC001855 |
| customs tariff number | 85444290 |
| GTIN | 4048879522571 |
| Packaging unit | 1 |
| **Electrical data \| Supply** | |
| Operating voltage AC max. | 250 V |
| Operating voltage DC max. | 250 V |
| Operating voltage AC (UL-listed) | 30 V |
| Operating voltage DC (UL-listed) | 30 V |
| Current operating per contact max. | 4 A |
| **Diagnostics** | |
| Status indication LED | no |
| **Installation \| Connection** | |
| Mounting set | M12 x 1 |
| **Device protection \| Electrical** | |
| Additional condition protection degree | inserted, screwed |
| Pollution Degree | 3 |
| Rated surge voltage | 2,5 kV |
| Material group (IEC 60664-1) | I |
| **Mechanical data \| Material data** | |
| Coating locking | Nickeled |
| Coating of fitting | nickel plated |
| Material gasket | FKM |
| Locking material | Zinc die-casting |
| Material screw connection | Zinc die-casting |
| **Mechanical data \| Mounting data** | |
| Mounting method | inserted, screwed, Shaking protection |
| **Environmental characteristics \| Climatic** | |
| Operating temperature min. | -25 °C |
| Operating temperature max. | 85 °C |
| Additional condition temperature range | depending on cable quality |
| **Important installation notes** | |
| Note on strain relief | Protect the connectors by suitable measures from mechanical loads, e.g. by the usage of cable ties. |
| Note on bending radius | **Attention:** Observe the permissible bending radii when laying cables, as the IP protection class can be endangered by excessive bending forces. |
| **Conformity** | |
| Product standard | DIN EN 61076-2-101 (M12) |
| **Installation \| Cable** | |
| Cable identification | 213 |
| Cable Type | 1 |
| Jacket Color | gray |
| Type of Certificate | cURus |
| Amount stranding | 1 |

| | |
|---|---|
| Stranding | 3 wires twisted |
| wire arrangement | brown, black, blue |
| Cable weigth | 34,1 g/m |
| Material jacket | PVC |
| Shore hardness jacket | 85 ± 5 Shore A |
| Freedom from ingredients (jacket) | lead-free, cadmium-free, CFC-free, silicone-free |
| Outer-diameter (jacket) | 4,6 mm |
| Tolerance outer diameter (sheath) | ± 5 % |
| Material wire insulation | PVC |
| Amount wires | 3 |
| Outer diameter insulation | 1,25 mm |
| Outer diameter tolerance core insulation | ± 5 % |
| Shore hardness wire insulation | 45 ± 5 Shore D |
| Material properties wire insulation | good machinability |
| Ingredient freeness wire insulation | lead-free, cadmium-free, CFC-free, silicone-free |
| Amount strands (wire) | 19 |
| Diameter of single wires | 0,15 mm |
| Conductor crosssection (wire) | 0,34 mm² |
| Material conductor wire | Stranded copper wire, bare |
| Conductor type (wire) | Strand class 5 |
| Nominal voltage AC max. | 300 V |
| Current load capacity (standard) | to DIN VDE 0298-4 |
| Current load capacity min. wire | 6 A |
| Electrical resistance line constant wire | 57 Ω/km @ 20 °C |
| AC withstand voltage (wire - wire) | 2 kV @ 60 s |
| Power frequency withstand voltage (wire - jacket) | 2 kV @ 60 s |
| Min. operating temperature (static) | -30 °C |
| Max. operating temperature (fixed) | 80 °C |
| Operating temperature min. (dynamic) | -5 °C |
| Operating temperature max. (dynamic) | 80 °C |
| Flame resistance | IEC 60332-2-2 \| UL 1581 § 1100 FT2 \| UL 1581 § 1090 |
| chemical resistance | Good, application-related testing |
| Gasoline resistance | Good, application-related testing |
| Oil resistance | Good, application-related testing \| DIN EN 60811-404 |
| Bending radius (fixed) | 5 x Outer diameter |
| Bending radius (dynamic) | 10 x Outer diameter |