MURR ELEKTRONIK
stay connected

LED-display 110V AC/DC green

Product discontinued, no alternative

(green)
110 V AC/DC
Protection IP40

Link to Product

Illustration

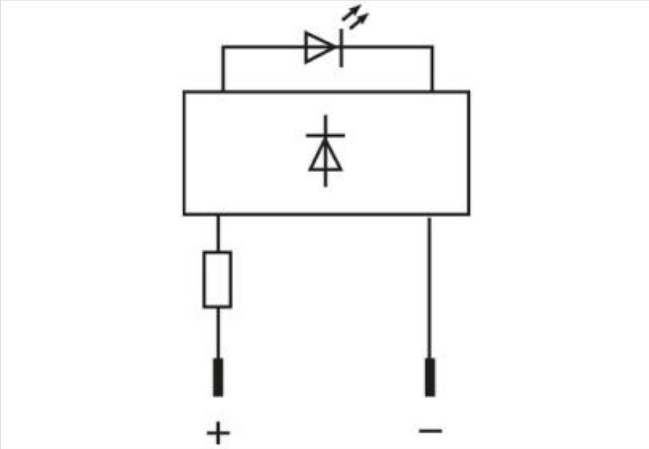

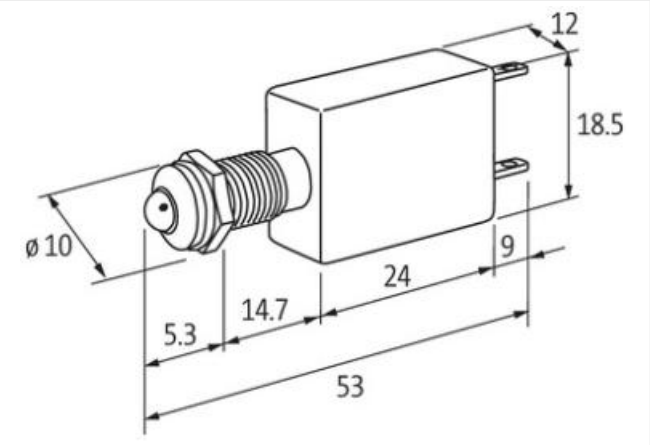

Product may differ from Image

Commercial data	
ECLASS-6.0	27261590
ECLASS-7.0	27261590
ECLASS-8.0	27261590
ECLASS-9.0	27261590
ETIM-5.0	EC000272
customs tariff number	85318070
GTIN	4048879040983
Packaging unit	10
Electrical data | Supply	
Operating voltage AC	110 V
Operating voltage AC min.	95 V

The information in this Product-PDF has been compiled with the utmost care.
Liability for the correctness completeness and topicality of the information is restricted to gross negligence. Version: 2024-04-20

Operating voltage AC max.	121 V
Operating voltage DC	110 V
Operating voltage DC min.	95 V
Operating voltage DC max.	121 V
Current consumption min.	4,5 mA
Current consumption max.	5,5 mA
Installation | Connection	
Connection information	Faston 2.8×0.8 mm
Device protection | Electrical	
Degree of protection (EN IEC 60529)	IP40
Mechanical data	
Diameter LED	5 mm
Mechanical data | Material data	
Color housing	gray
Material housing	PVC
Mechanical data | Mounting data	
Diameter front panel drilling	8 mm
Height	18,5 mm
Width	12 mm
Depth	53 mm
Environmental characteristics | Climatic	
Operating temperature min.	-40 °C
Operating temperature max.	70 °C

The information in this Product-PDF has been compiled with the utmost care.
Liability for the correctness completeness and topicality of the information is restricted to gross negligence. Version: 2024-04-20