MURR ELEKTRONIK
stay connected

MET 1-PHASE CONTROL AND ISOLATION TRANSFORMER

P: 630VA IN: 230VAC+/- 5% OUT: 230VAC

Single-phase - Control and Isolation Transformers
630 VA
Isolation class T 60/B

Link to Product

Illustration

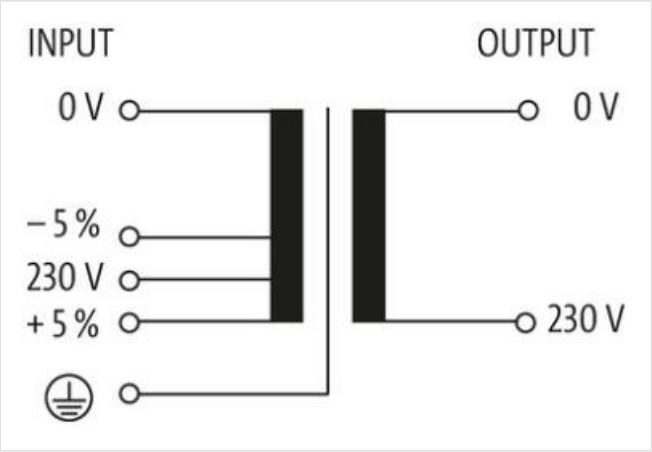

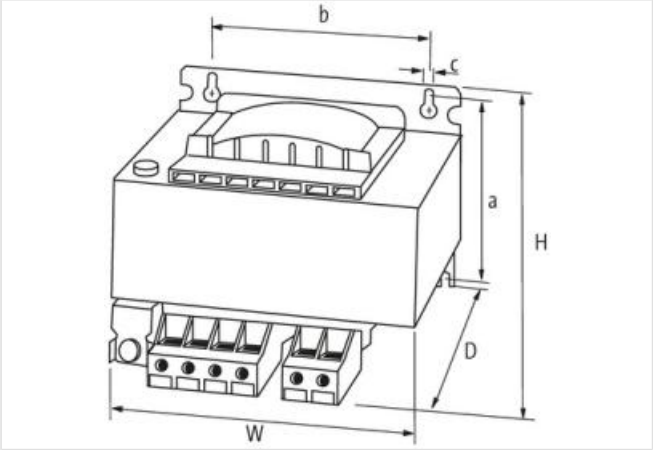

Product may differ from Image

Commercial data

ECLASS-6.0	27031302
ECLASS-6.1	27031302
ECLASS-7.0	27031302
ECLASS-8.0	27031302
ECLASS-9.0	27031302
ECLASS-10.1	27031302

The information in this Product-PDF has been compiled with the utmost care.
Liability for the correctness completeness and topicality of the information is restricted to gross negligence. Version: 2024-04-25

ECLASS-11.1	27031302
ECLASS-12.0	27031302
ETIM-5.0	EC002486
customs tariff number	85043180
GTIN	4048879079006
Packaging unit	1
Electrical data | Supply	
Power frequency	50 ... 60 Hz
Electrical data | Input	
Input voltage AC	230 V
Input voltage AC min.	218,5 V
Input voltage AC max.	241,5 V
Current input AC	2,98 A
Max. inrush current	75,6 A
Short-circuit current	82,3 A
Electrical data | Output	
Output voltage AC	230 V
Output voltage adjustable	no
Power rating AC max.	630 VA
Device protection | Electrical	
Insulation test voltage input - output	4 kV
Mechanical data | Mounting data	
Suitable for mounting type	Schlüssellochaufhängung
Mounting dimension a	107,5 mm
Mounting dimension b	122 mm
Mounting dimension c	7 mm
Height	129 mm
Width	150 mm
Depth	148 mm
Diameter bore	7 mm
Length bore	11 mm
Environmental characteristics | Climatic	
Operating temperature min.	-20 °C
Operating temperature max.	60 °C
Storage temperature min.	-40 °C
Storage temperature max.	80 °C
Conformity	
Product standard	EN 61558-1, EN 61558-2-4, EN 62041 category 0

The information in this Product-PDF has been compiled with the utmost care.
Liability for the correctness completeness and topicality of the information is restricted to gross negligence. Version: 2024-04-25