MURR ELEKTRONIK
stay connected

Discontinued since 27 April 2020

Last order 30 November 2020

INPUT: 100...240 V AC; 120...370 V DC
OUTPUT: 12...15 V DC
Current: 6 A
Spring clamp plug-in terminal: 0.2...2.5 mm²

Link to Product

Illustration

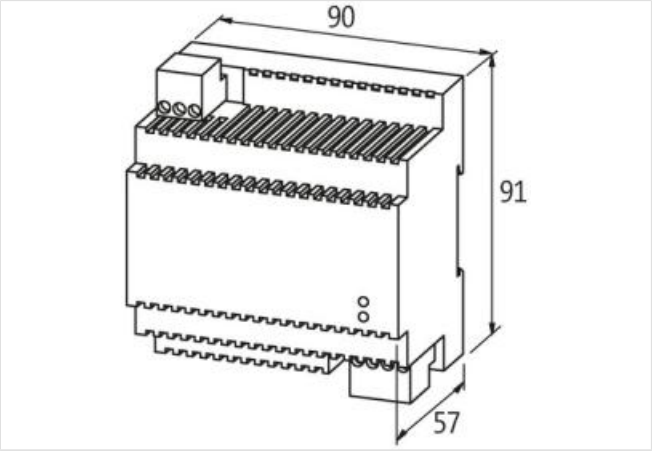

Product may differ from Image

Commercial data	
ECLASS-6.0	27049002
ECLASS-7.0	27049002
ECLASS-8.0	27049002
ECLASS-9.0	27040701
ETIM-5.0	EC002540
customs tariff number	85044095
GTIN	4048879299961
Packaging unit	1
Electrical data	
Number of devices parallel connection max.	5
Number of devices series connection max.	2
Parallel connection	yes
Series connection	yes
Security level	SELV
Electrical data | Supply	
Power frequency	50 ... 60 Hz
Electrical data | Input	
Input voltage 1 AC	115 V
Input voltage 2 AC	230 V
Input voltage AC min.	100 V

The information in this Product-PDF has been compiled with the utmost care.
Liability for the correctness completeness and topicality of the information is restricted to gross negligence. Version: 2024-04-20

Input voltage AC max.	240 V
Input voltage DC min.	120 V
Input voltage DC max.	370 V
Input current at input voltage 1 AC	1,7 A
Input current at input voltage 2 AC	1 A
Inrush current max.	60 A
External back-up fuse per phase max.	10 A
Efficiency	86 % @ 110 V AC, 88 % @ 230 V AC
Electrical data | Output	
Output voltage DC	12 V
Output voltage DC min.	12 V
Output voltage DC max.	15 V
Output voltage adjustable	yes
Output current	6 A
Mains failure bridging min.	10 ms @ 115 V AC
Mains failure bridging max.	25 ms @ 115 V AC
Ripple effective max.	20 mV
Spikes (s-s) max.	100 mV
Device protection | Electrical	
Degree of protection (EN IEC 60529)	IP20
Overload protection output	yes
Short-circuit protection output	yes
Mechanical data | Mounting data	
Mounting method	geschnappt
Suitable for mounting type	Mounting rail TH35, (EN 60715)
Height	91 mm
Width	90 mm
Depth	57 mm
Environmental characteristics | Climatic	
Operating temperature min.	0 °C
Operating temperature max.	50 °C
Derating from	50 °C
Storage temperature min.	-25 °C
Storage temperature max.	85 °C
Relative humidity min. (operation)	20 %
Relative humidity max. (operation)	90 % no condensation
Conformity	
Product standard	IEC 61010-2-201
EMC	EN 55022 B, EN 61000-3-2
Low Voltage Directive	EN 61204-3

The information in this Product-PDF has been compiled with the utmost care.
Liability for the correctness completeness and topicality of the information is restricted to gross negligence. Version: 2024-04-20