MURR ELEKTRONIK
stay connected

MCS POWER SUPPLY 1-PHASE,

IN: 185-265VAC OUT: 24-28V/5ADC

INPUT: 185...265 V AC
OUTPUT: 24...28 V DC
Current: 5 A

Link to Product

Illustration

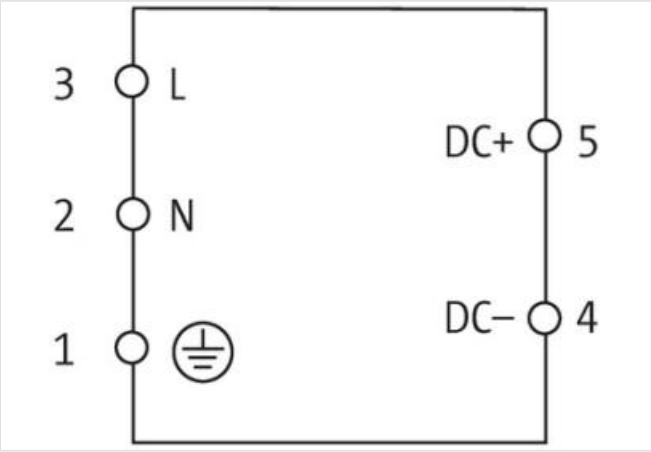

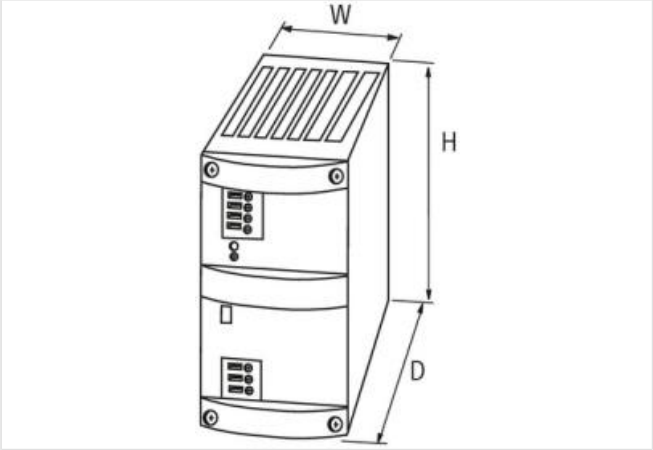

Product may differ from Image

Commercial data

ECLASS-6.0	27049002
ECLASS-6.1	27049002
ECLASS-7.0	27049002
ECLASS-8.0	27049002
ECLASS-9.0	27040701
ECLASS-10.1	27040701

The information in this Product-PDF has been compiled with the utmost care.
Liability for the correctness completeness and topicality of the information is restricted to gross negligence. Version: 2024-04-20

ECLASS-11.1	27040701
ECLASS-12.0	27040701
ETIM-5.0	EC002540
customs tariff number	85044083
GTIN	4048879080545
Packaging unit	1
Electrical data	
Parallel connection	yes
Series connection	yes
Security level	SELV
Electrical data | Supply	
Power frequency	50 ... 60 Hz
Electrical data | Input	
Input voltage AC	230 V
Input voltage AC min.	185 V
Input voltage AC max.	265 V
Current input AC	1,1 A
Inrush current max.	35 A
External back-up fuse per phase max.	10 A
Efficiency	84 %
Electrical data | Output	
Selectable switch-off mode	front sided plug link (automatic re-start or definite shut-off)
Output voltage DC	24 V
Output voltage DC min.	24 V
Output voltage DC max.	28 V
Output voltage adjustable	yes
Output current	5 A
Output current (UL)	6 A
Mains failure bridging min.	20 ms @ 230 V AC
Ripple effective max.	20 mV
Spikes (s-s) max.	80 mV
Device protection | Electrical	
Overload protection output	yes
Short-circuit protection output	yes
Mechanical data | Mounting data	
Mounting method	geschnappt
Suitable for mounting type	Mounting rail TH35, (EN 60715)
Height	115 mm
Width	54 mm
Depth	125 mm
Environmental characteristics | Climatic	
Operating temperature min.	0 °C
Operating temperature max.	60 °C
Storage temperature min.	-25 °C
Storage temperature max.	85 °C
Relative humidity min. (operation)	5 %
Relative humidity max. (operation)	95 % no condensation
Connection type 2	
Connection	Spring clamp terminals FK
Family construction form	terminal
Gender	female

The information in this Product-PDF has been compiled with the utmost care.
Liability for the correctness completeness and topicality of the information is restricted to gross negligence. Version: 2024-04-20

Color contact carrier	green
No. of poles	2
PIN 1	-
PIN 2	+
Connection	Spring clamp terminals FK
Family construction form	terminal
Gender	female
Color contact carrier	green
No. of poles	3
PIN 1	PE
PIN 2	N
PIN 3	L

The information in this Product-PDF has been compiled with the utmost care.
Liability for the correctness completeness and topicality of the information is restricted to gross negligence. Version: 2024-04-20