MURR ELEKTRONIK
stay connected

MSDD pass-through USB 3.0 form A, 5.0 m cable, design silver

Link to Product

Illustration

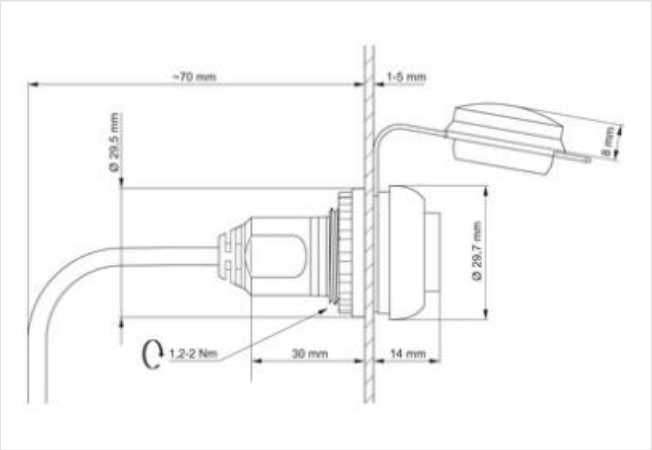

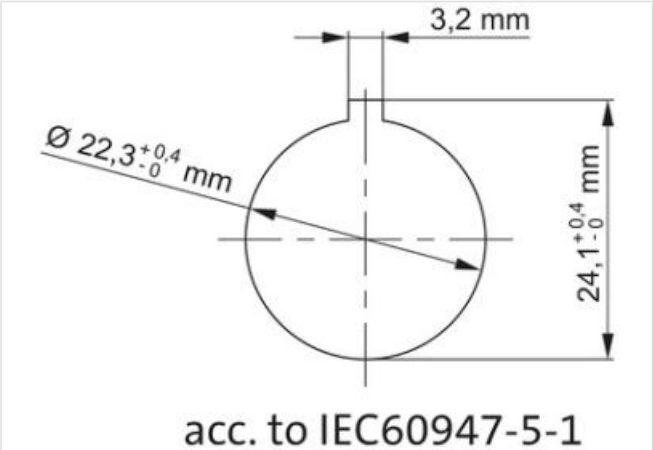

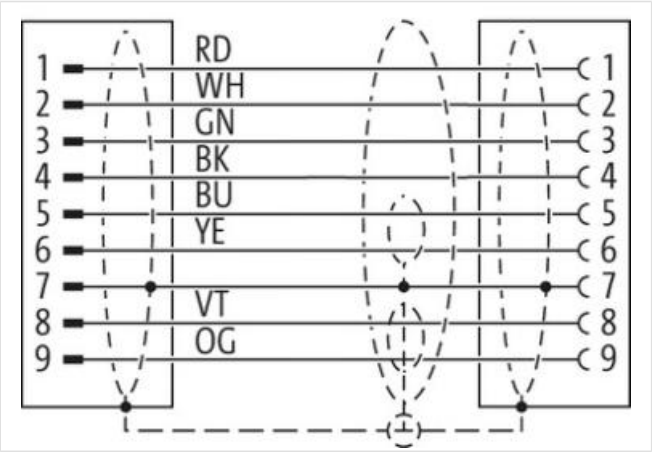

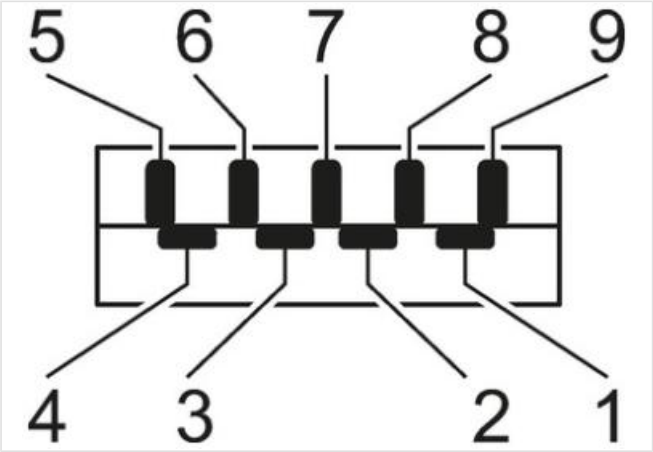

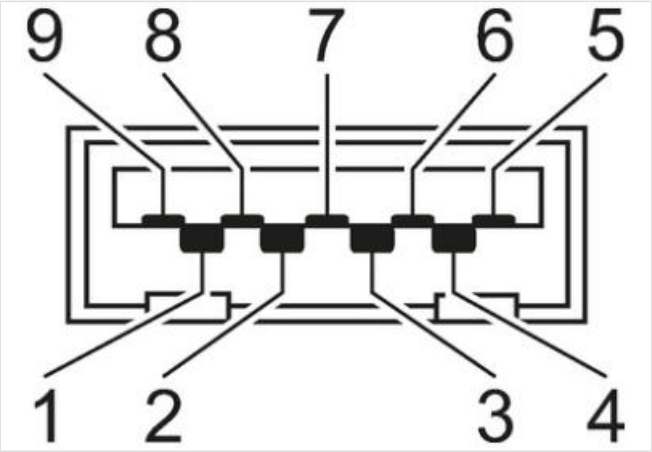

Product may differ from Image

The information in this Product-PDF has been compiled with the utmost care.
Liability for the correctness completeness and topicality of the information is restricted to gross negligence. Version: 2024-04-27

MURR ELEKTRONIK
stay connected

Commercial data	
ECLASS-6.1	27143419
ECLASS-7.0	27440515
ECLASS-8.0	27440515
ECLASS-9.0	27440515
ECLASS-10.1	27440515
ECLASS-11.1	27440515
ECLASS-12.0	27440515
customs tariff number	85444290
GTIN	4048879857017
Packaging unit	1
Electrical data | Supply	
Operating voltage AC	5 V
Operating voltage DC	5 V
Operating current max.	900 mA
Industrial communication	
USB specification	3.0
Device protection	
Shielded	yes
Device protection | Electrical	
Degree of protection (EN IEC 60529)	IP20, IP65
Protection NEMA	2, 3R, 4, 12, 13, 4x
Additional condition protection degree	inserted, in closed state
Device protection | Mechanical	
Mechanical endurance	1500 Cycles
Mechanical data | Mounting data	
Diameter cutout	22,5 mm
Diameter	29,5 mm
Mounting depth	70 mm
Depth	30 mm
Approvals	
UL 50E	yes

The information in this Product-PDF has been compiled with the utmost care.
Liability for the correctness completeness and topicality of the information is restricted to gross negligence. Version: 2024-04-27