MURR ELEKTRONIK
stay connected

M12 male 90° A-cod. with cable shielded

PUR 5x0.34 shielded gy UL/CSA+drag ch. 10m

Male 90°
M12, 5-pole
shielded
A-coded
Plastic housings with good resistance against chemicals and oils.
The resistance to aggressive media should be individually tested for your application. Further details on request.
Further cable lengths on request.

Link to Product

Illustration

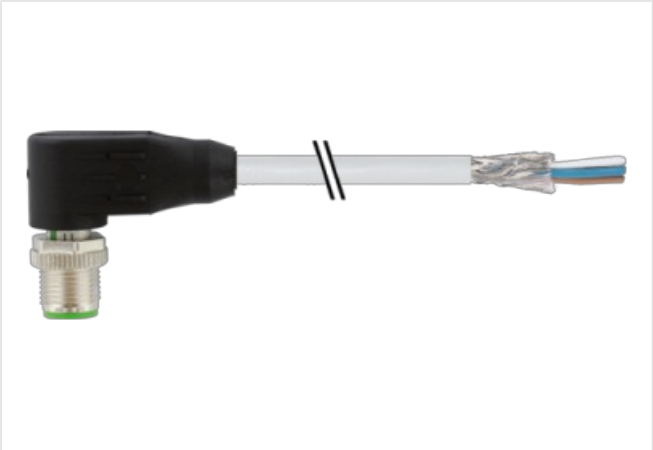

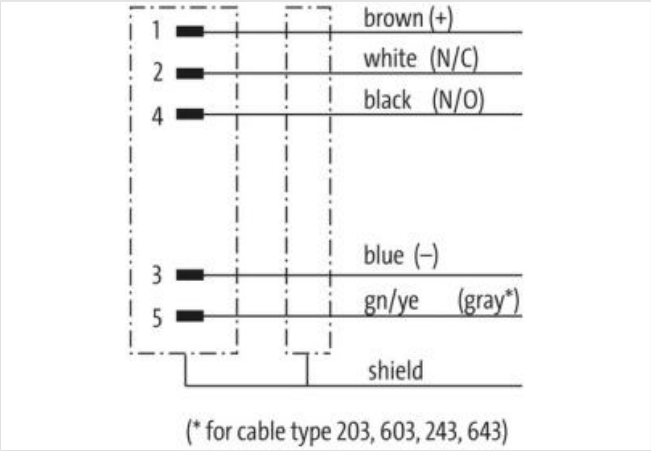

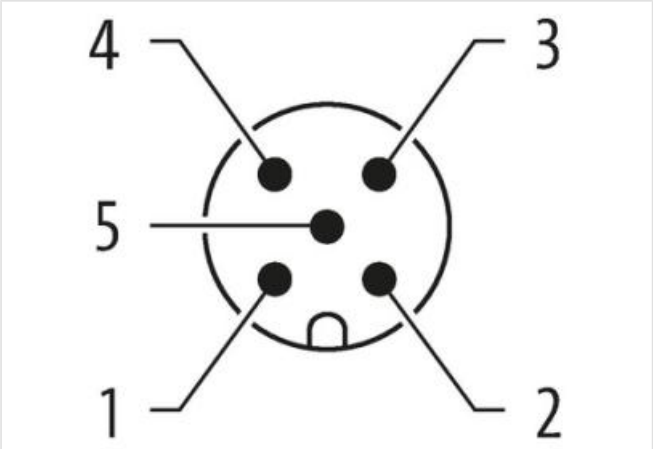

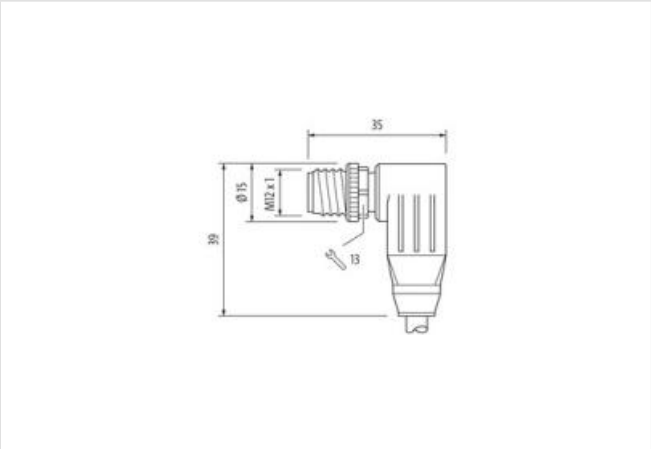

Product may differ from Image

Cable length	10 m
Side 1	
Tightening torque	0,6 Nm

Mounting method	inserted, screwed
Coating contact	gold plated
Family construction form	M12
Thread	M12 x 1
Coding	A
Material contact	Copper alloy
Material	PUR
Width across flats	SW13
Degree of protection (EN IEC 60529)	IP65, IP66K, IP67
Side 2	
Coating contact	gold plated
Commercial data	
ECLASS-6.0	27279218
ECLASS-7.0	27279218
ECLASS-8.0	27279218
ECLASS-9.0	27060311
ECLASS-10.1	27060311
ECLASS-11.1	27060311
ECLASS-12.0	27060311
ETIM-5.0	EC001855
customs tariff number	85444290
GTIN	4048879728911
Packaging unit	1
Electrical data | Supply	
Operating voltage AC max.	60 V
Operating voltage DC max.	60 V
Operating voltage AC (UL-listed)	30 V
Operating voltage DC (UL-listed)	30 V
Current operating per contact max.	4 A
Installation | Connection	
Mounting set	M12 x 1
Device protection | Electrical	
Additional condition protection degree	inserted, screwed
Pollution Degree	3
Rated surge voltage	1,5 kV
Material group (IEC 60664-1)	I
Mechanical data | Material data	
Coating locking	Nickeled
Coating of fitting	nickel plated
Locking material	Zinc die-casting
Material screw connection	Zinc die-casting
Mechanical data | Mounting data	
Mounting method	inserted, screwed, Shaking protection
Environmental characteristics | Climatic	
Operating temperature min.	-25 °C
Operating temperature max.	85 °C
Additional condition temperature range	depending on cable quality
Important installation notes	
Note on strain relief	Protect the connectors by suitable measures from mechanical loads, e.g. by the usage of cable ties.
Note on bending radius	**Attention:** Observe the permissible bending radii when laying cables, as the IP protection class can be endangered by excessive bending forces.

MURR ELEKTRONIK
stay connected

Conformity	
Product standard	DIN EN 61076-2-101 (M12)
Installation | Cable	
Cable identification	242
Cable Type	3
Jacket Color	gray
Type of Certificate	cURus
Amount stranding	1
Stranding	5 wires around Core filler twisted
Cable shielding (type)	copper braid, tinned
Cable shielding (coverage)	80 %
Banding	Fleece, Foil
Filler	yes
wire arrangement	brown, black, blue, white, green-yellow
Traversing distance (C-track)	5 m @ 25 °C | horizontal
Cable weigth	57,2 g/m
Material jacket	PUR
Shore hardness jacket	90 ± 5 Shore A
Freedom from ingredients (jacket)	lead-free, cadmium-free, CFC-free, halogen-free, silicone-free
Outer-diameter (jacket)	5,6 mm
Tolerance outer diameter (sheath)	± 5 %
Material wire insulation	PP
Amount wires	5
Outer diameter insulation	1,25 mm
Outer diameter tolerance core insulation	± 5 %
Shore hardness wire insulation	70 ± 5 Shore D
Ingredient freeness wire insulation	lead-free, cadmium-free, CFC-free, halogen-free, silicone-free
Amount strands (wire)	42
Diameter of single wires	0,1 mm
Conductor crosssection (wire)	0,34 mm²
Material conductor wire	Stranded copper wire, bare
Conductor type (wire)	strand class 6
Nominal voltage AC max.	300 V
Current load capacity (standard)	to DIN VDE 0298-4
Current load capacity min. wire	4,5 A
Electrical resistance line constant wire	57 Ω/km @ 20 °C
AC withstand voltage (wire - wire)	2 kV @ 60 s
Power frequency withstand voltage (wire - jacket)	2 kV @ 60 s
AC withstand voltage (wire - shield)	2 kV @ 60 s
Min. operating temperature (static)	-40 °C
Max. operating temperature (fixed)	80 °C / 90 °C @ 10000 h Operation
Operating temperature min. (dynamic)	-25 °C
Operating temperature max. (dynamic)	80 °C / 90 °C @ 10000 h Operation
Flame resistance	IEC 60332-2-2 | UL 1581 § 1100 FT2 | UL 1581 § 1090
chemical resistance	Good, application-related testing
Gasoline resistance	Good, application-related testing
Oil resistance	Good, application-related testing | DIN EN 60811-404
Bending radius (fixed)	5 x Outer diameter
Bending radius (dynamic)	10 x Outer diameter
Travel speed (C-track)	5 Mio. @ 25 °C
No. of torsion cycles	2 Mio.
Torsion stress	± 30 °/m

Torsion speed	35 cycles/min