MQ15 male 0° / MQ15 female 0° 600V AC type 3

PVC 6x1.5 bk UL/CSA 7m

Male straight – female straight
MQ15, 6-pole
with cable sleeves
Plastic housings with good resistance against chemicals and oils.
The resistance to aggressive media should be individually tested for your application. Further details on request.
Further cable lengths on request.

Link to Product

Illustration

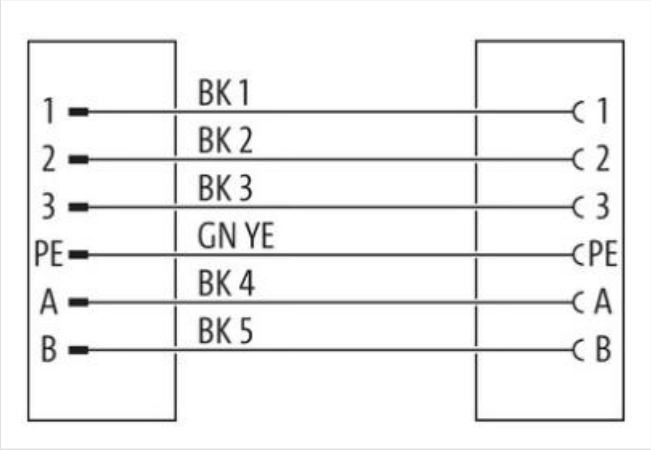

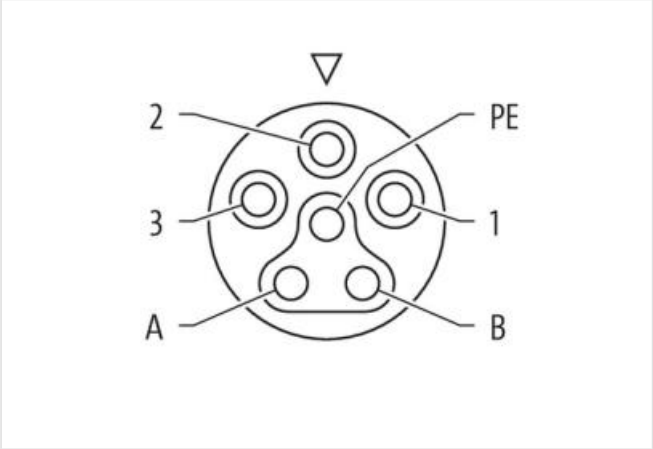

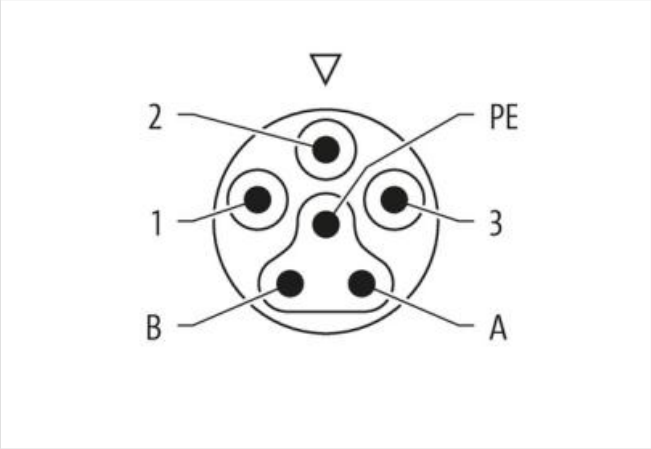

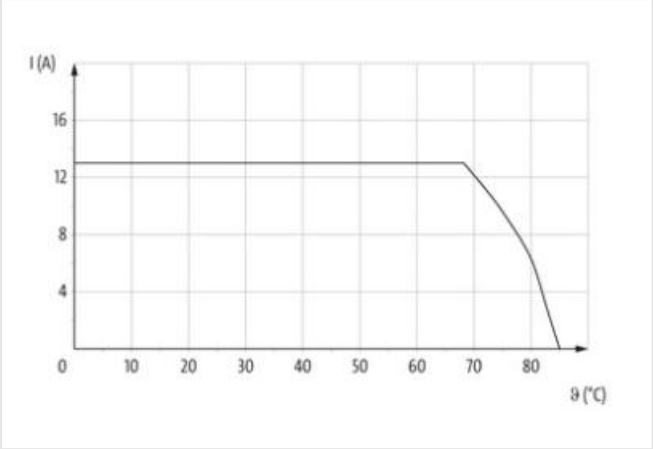

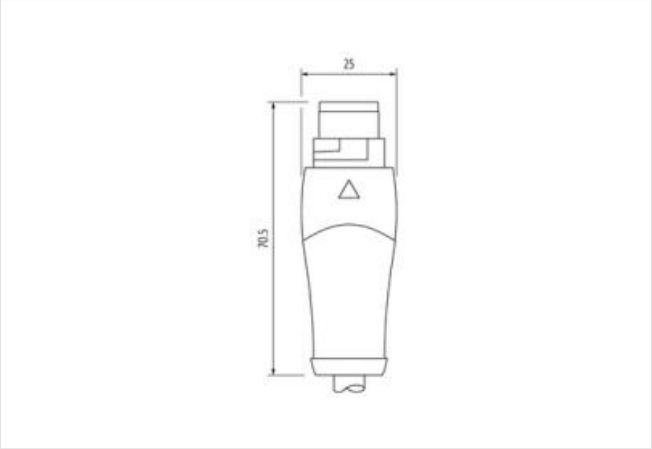

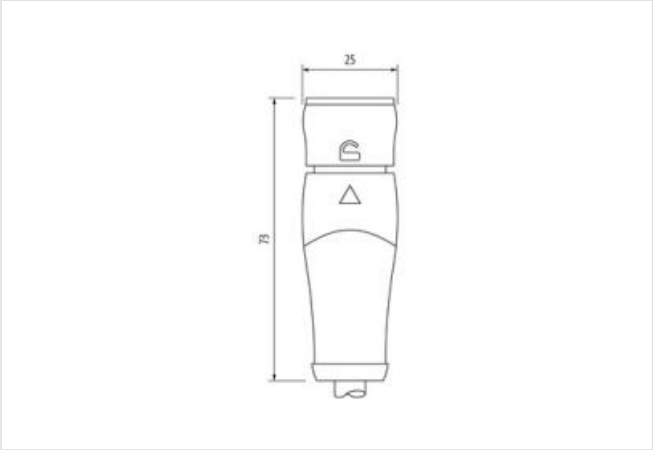

Product may differ from Image

Cable length	7 m
Side 1	
Mounting method	inserted, locked
Coating contact	silver-plated
Family construction form	MQ15
suitable for corrugated tube (internal Ø)	18 mm
Material contact	Copper alloy
No. of poles	6
Degree of protection (EN IEC 60529)	IP65, IP67
Side 2	
Mounting method	inserted, locked
Coating contact	silver-plated
Family construction form	MQ15
Material contact	Copper alloy
No. of poles	6
Degree of protection (EN IEC 60529)	IP65, IP67
Commercial data	

ECLASS-6.0	27279218
ECLASS-6.1	27279218
ECLASS-7.0	27279218
ECLASS-8.0	27279218
ECLASS-9.0	27060327
ECLASS-10.1	27060311
ECLASS-11.1	27060311
ECLASS-12.0	27060327
ETIM-5.0	EC001855
customs tariff number	85444290
GTIN	4065909066133
Packaging unit	1
Electrical data | Supply	
Operating voltage AC per power contact max.	600 V
Operating voltage AC per signal contact max.	63 V
Operating voltage DC per signal contact max.	63 V
Operating current per power contact max.	13 A
Operating current per signal contact max.	10 A
Diagnostics	
Status indication LED	no
Installation | Pin assignment	
Coding	Type 3
Configuration	fully used
Device protection | Electrical	
Additional condition protection degree	inserted, locked
Pollution Degree	3
Rated surge voltage power contacts	6 kV
Rated surge voltage signal contacts	1,5 kV
Material group (IEC 60664-1)	I
Mechanical data | Material data	
Material housing	PUR
Material contact carrier	PA
Locking material	POM
Mechanical data | Mounting data	
Looking techniques	bayonet-locking
Environmental characteristics | Climatic	
Operating temperature min.	-30 °C
Operating temperature max.	85 °C
Additional condition temperature range	depending on cable quality
Conformity	
Product standard	IEC 61076-2-116
Installation | Cable	
STOOW style jacket	Power
Cable identification	P73
Cable Type	1
Jacket Color	black
Type of Certificate	cURus
Amount stranding	1
Stranding	6 wires around Core filler twisted
Filler	yes

wire arrangement	black 5, black 4, black 3, black 2, black 1, green-yellow
Cable weigth	161,7 g/m
Material jacket	PVC
Shore hardness jacket	90 ± 5 Shore A
Freedom from ingredients (jacket)	lead-free, cadmium-free, CFC-free
Outer-diameter (jacket)	9 mm
Tolerance outer diameter (sheath)	± 5 %
Material wire insulation	PP
Amount wires	6
Outer diameter insulation	2,35 mm
Outer diameter tolerance core insulation	± 5 %
Shore hardness wire insulation	60 ± 5 Shore D
Ingredient freeness wire insulation	lead-free, cadmium-free, CFC-free, halogen-free, silicone-free
Amount strands (wire)	84
Diameter of single wires	0,15 mm
Conductor crosssection (wire)	1,5 mm²
Material conductor wire	Stranded copper wire, bare
Conductor type (wire)	strand class 6
Nominal voltage AC max.	1000 V
Current load capacity (standard)	to DIN VDE 0298-4
Current load capacity min. wire	12,6 A
Electrical resistance line constant wire	13,3 Ω/km @ 20 °C
AC withstand voltage (wire - wire)	10 kV @ 60 s
Power frequency withstand voltage (wire - jacket)	10 kV @ 60 s
Min. operating temperature (static)	-40 °C
Max. operating temperature (fixed)	80 °C
Operating temperature min. (dynamic)	-25 °C
Operating temperature max. (dynamic)	80 °C
UV resistance	DIN EN ISO 4892-2 A
Flame resistance	UL 1581 § 1090 | UL 1581 § 1100 FT2 | IEC 60332-2-2
chemical resistance	Good, application-related testing
Gasoline resistance	Good, application-related testing
Oil resistance	DIN EN 60811-404 | Good, application-related testing
Bending radius (fixed)	5 x Outer diameter
Bending radius (dynamic)	10 x Outer diameter